SIMONWORK BT6 BOX 1200 Metal

83,5 x 120,3 x 73,3 cm
32.9" x 47.4" x 28.9"

5 Años Garantía*
Years Guarantee
Jahre Garantie
Ans Garantie
Anos de Garantia
SIMONRACK

4 x 82.5 cm 32.5"	2 x 72 cm 28.3"	2 x 72 cm 28.3"	2 x 100 cm 39.4"	1 x 73x120 cm 28.7"x47.2"
46 x	46+4 x	4 x	2 x 72 cm 28.3"	1 x 35 kg (80 lb) 56x85 cm 22.0"x33.5"

*MEDIDAS EN USO USED MEASUREMENTS
MASSNAHMEN IM EINSATZ MESURES EN EMPLOI MEDIDAS EM USO:
835 x 1200 x 733 mm (32.8" x 47.2" x 28.8")

MONTAJE · ASSEMBLY · AUFBAU · MONTAGE 15 min

8 435104 938478

ESTANTERIAS SIMON S.L. B.50.556.463
PG. ALFAMEN C/ POLIGONO C, Nº3
ALFAMEN (ZARAGOZA)

Simon Rack
SINCE 1964 - MANUFACTURER

www.simonrack.com

MADE IN SPAIN European Quality
EPOXY POLIESTER
EMPRESA CERTIFICADA EN SISTEMA DE GESTIÓN DE CALIDAD ISO 9001:2015

INSTRUCCIONES INSTRUCTIONS ANLEITUNG INSTRUCTIONS

Simon Rack
SINCE 1964 - MANUFACTURER

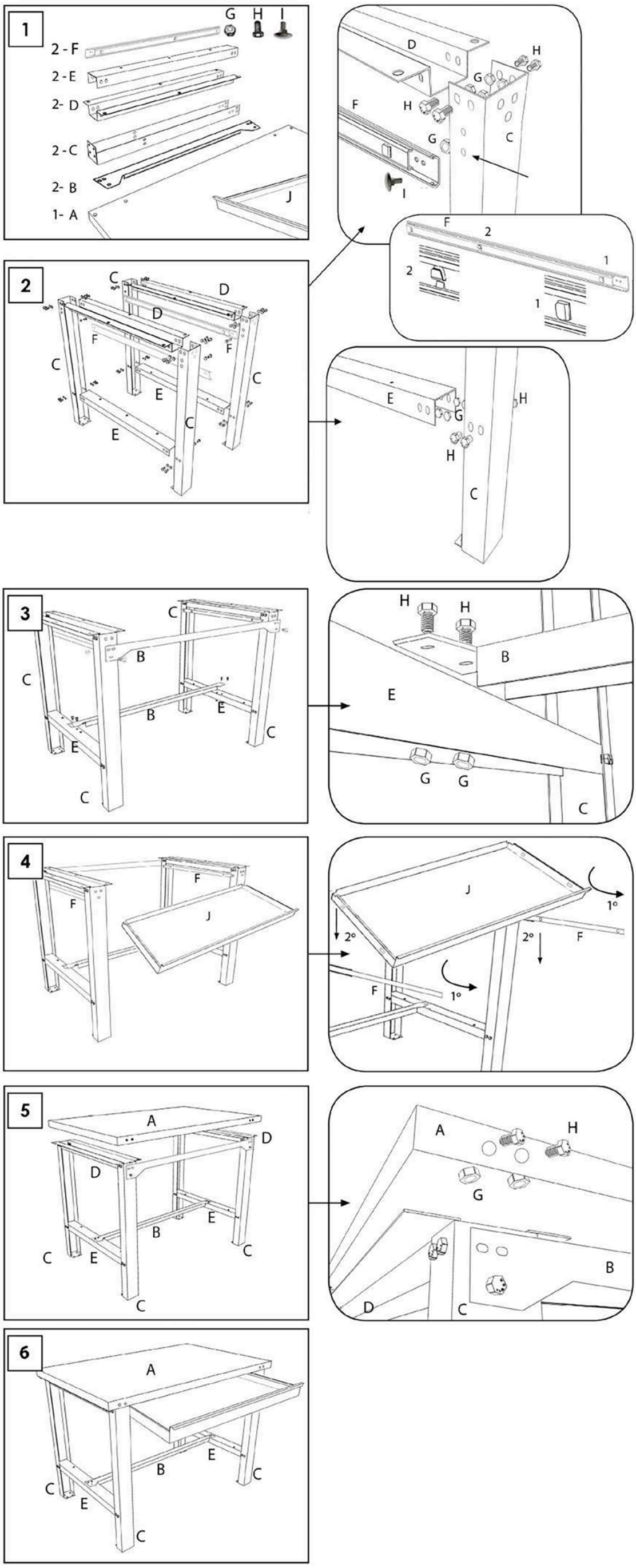

www.instructionsrack.com/bt6metalbox

www.simonrack.com • www.simonrack.com • www.simonrack.com • www.simonrack.com • www.simonrack.com • www.simonrack.com • www.simonrack.com • www.simonrack.com

SIMONCLASSIC

SIMONCLICK

SIMONTALLER

SIMONAUTO

SIMONWORK

SIMONLOCKER

SIMONOFFICE

SIMONHOME

SIMONGARDEN

SIMONTITÁN

SIMONINOX

SIMONINDUSTRIAL

SIMONPALET

SIMONLEVER

ALTILLOS Y PASILLOS ELEVADOS
PLATFORMS AND MEZZANINES
LAGERBÜHNEN • PLATES-FORMES ET MEZZANINES

* Kg / lb por bandeja con carga uniformemente repartida
Kg / lb per shelf uniformly distributed load
Kg / lb pro fach bei gleichmäßig verteilter last
Kg / lb par plateau avec charge uniformément répartie